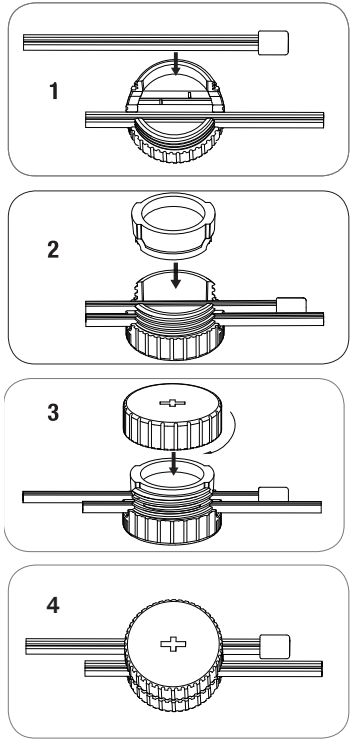

Luxform Global BV Transportstraat 1 8263 BW Kampen The Netherlands

LUXFORM® LIGHTING

12 V

Adjustable groundspot York-set

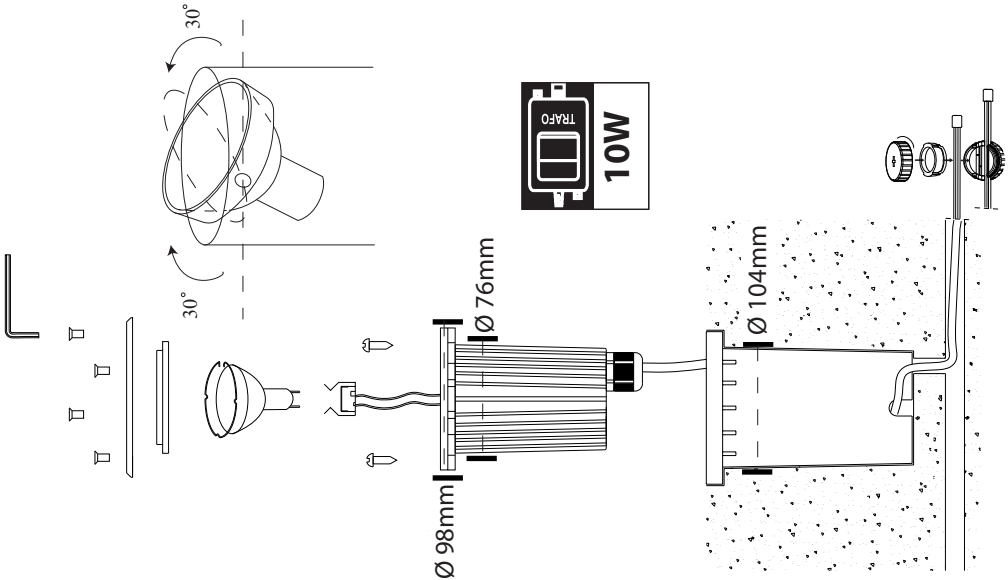

	Wet wood	Soft wood	Dry wood	Hard wood	Concrete	Brick wall
Drill	Ø 98mm	Ø 100mm	Ø 100mm	Ø 98mm		
Diamond drill					Ø 104mm	Ø 104mm

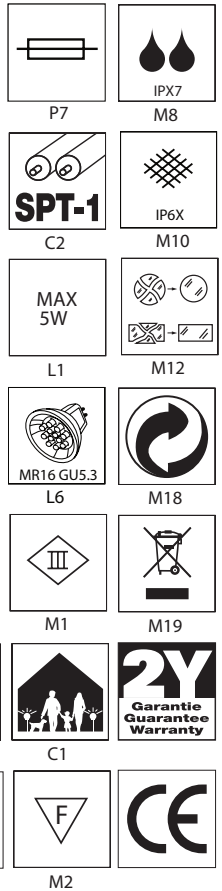

© Copyright 2016 Luxform Global BV Transportstraat 1 8263BW Kampen, The Netherlands

GB004133